Öhlins Shock Absorber for MX & Enduro

TTX44

Owner's Manual

ÖHLINS®
ADVANCED SUSPENSION TECHNOLOGY

Introduction

Öhlins Racing AB - The Story

It was the 1970's, a young man named Kenth Öhlin spent most of his spare time pursuing his favourite sport: motocross.

A careful observer, Kenth's attention was continually drawn to one specific detail - motocross bikes had more engine power than their suspension could handle.
It was not long before Kenth realised that better performance could be achieved by improved wheel suspension.

Öhlins Racing was established in 1976, and just two years later the company won its first World Championship title. Despite being in the business for 30 years, the search for perfection and new functions is still the main focus of the company.

***Congratulations**! You are now the owner of an Öhlins Shock Absorber. More than two hundred World Championships and other major world titles are definitive proof that Öhlins shock absorbers offer outstanding performance and reliability.*

Every product has gone through rigorous testing and engineers have spent thousands of hours, doing their very best to use every possible experience from our 30 years within the racing sport.

The product that you now have in your possession is pure racing breed that is built to withstand.

By installing this shock absorber on your bike you have made a clear statement… you are a serious rider with a focus on getting the maximal handling ability and outstanding feedback from your bike. Along comes the fact that your shock absorber will be a long lasting friend, delivering the very best of comfort and performance every time you go for a ride.

Go explore!

Note!

The shock absorber is a very important part of the vehicle and will affect the stability.

Read and make sure that you understand the information in this manual and the mounting instructions before you use this product. If you have any questions regarding installation or maintenance please contact an Öhlins dealer.

Öhlins Racing AB can not be held responsible for any damage to the shock absorber, vehicle, other property or injury to persons, if the instructions for installing and maintenance are not followed exactly.

Warning!

This product was developed and designed exclusively for a specific vehicle model and shall only be installed on the intended vehicle model in its original condition as delivered from the vehicle manufacturer.

This product contains pressurized nitrogen gas (N_2). Do not open, service or modify this product without proper education (authorized Öhlins dealer/distributor) and proper tools.

After installing this product, take a test ride at low speed to make sure that your vehicle has maintained its stability.

If the suspension makes an abnormal noise, or the function is irregular, or if you notice any leakage from the product, please stop the vehicle immediately and return the product to an Öhlins Service Centre.

Note!

When working on this product, always read the Vehicle Service Manual.

This Manual should be considered a part of the product and should therefore accompany the product throughout its life cycle.

Safety Symbols

In this manual, mounting instructions and other technical documents, important information concerning safety is distinguished by the following symbols:

The Safety Alert Symbol means: Warning! Your safety is involved.

Warning!

The Warning Symbol means: Failure to follow warning instructions can result in severe or fatal injury to anyone working with, inspecting or using the shock absorber, or to bystanders.

Caution!

The Caution Symbol means: Special precautions must be taken to avoid damage to the shock absorber.

Note!

The Note Symbol indicates information that is important regarding procedures.

© Öhlins Racing AB. All rights reserved. Any reprinting or unauthorized use without the written permission of Öhlins Racing AB is prohibited.
Printed in Sweden.

Contents

In this manual

	page
Introduction	1
Safety Precautions	2
Design and Functioning	4
Spring Preload	7
Compression and Rebound	8
Setting up your Vehicle	9
Inspection and Maintenance	13

Design and Functioning

Congratulations on choosing the Öhlins TTX motocross shock absorber - the most unique and powerful racing shock absorber available today. The TTX44 shock absorber design is the culmination of two decades of Öhlins successful
participation in World Championship events.

This shock absorber draws on all the expertise developed by Öhlins while winning more than a hundred World Championships.

The TTX44 shock absorber is designed to handle the demanding damping characteristics needed for all types of tracks, from hard packed soil to soft sand tracks.

The Öhlins TTX44 features a patented concept with a unique twin tube design that allows for the gas pressure to always back-up the low-pressure side of the piston to keep pressure at a controlled level. Also the twin tube design gives the possibility to have totally separated adjusters for compression and rebound damping.

The temperature stability is maintained by using a flow restriction design in the bleed valves that create a turbulent flow at very low piston velocities. Also, materials with different thermal expansion rates are used to compensate for the viscosity change of the fluid caused by changes in temperature.
The Öhlins shim system offers infinite combinations of shim stacks with a wide spectrum of different character with one and the same piston.

The whole system is pressurized by nitrogen gas behind a floating piston to ensure separation of the gas and fluid.

Design and Functioning

The Öhlins TTX44 shock absorber is a racer friendly shock absorber, easy to set up, dial in and rebuild. Support is always available from the Öhlins distributors worldwide.

When the shock absorber moves, the fluid inside is forced to flow through two types of orifices. *Bleed valves* (Fig. 1), small orifices that create a flow restriction simply by being small and *shim valves* (Fig. 2) where fluid pressure has to deflect thin steel washers (shims) to open up an orifice and allow fluid flow through it.

To control damping force the bleed valves can be changed in size by the external adjusters, compression and rebound.

By altering the size of the shim stack (number, thickness, diameter and shape) on the shim valve the characteristics of the damping action can be changed.

Note!

Altering the size of the shim stack should only be performed by an authorized Öhlins service workshop.

Compression Damping

When movement of the motorcycle causes compression of the shock absorber, (Fig. 3) the fluid above the piston is pressurized and has to move. *It has three different escape routes*:

1. Piston compression shim valve.
2. Compression adjuster bleed valve.
3. Compression adjuster shim valve.

Fluid will at every compression movement use all these routes but at slow movement speeds the percentage going through the bleeds is higher and at fast movement the shim valves take care of most of the flow.

The volume below the piston increases and has to be filled up with fluid, if the flow coming in through the piston compression shim valve and rebound adjuster bleed valve is not enough the gas pressure from the reservoir pushes fluid in via a check valve in the bottom of the cylinder tube.

During compression movement piston rod volume is entering the main body and the corresponding volume of damper fluid has to flow into the reservoir, the separating piston moves resulting in an increased gas pressure.

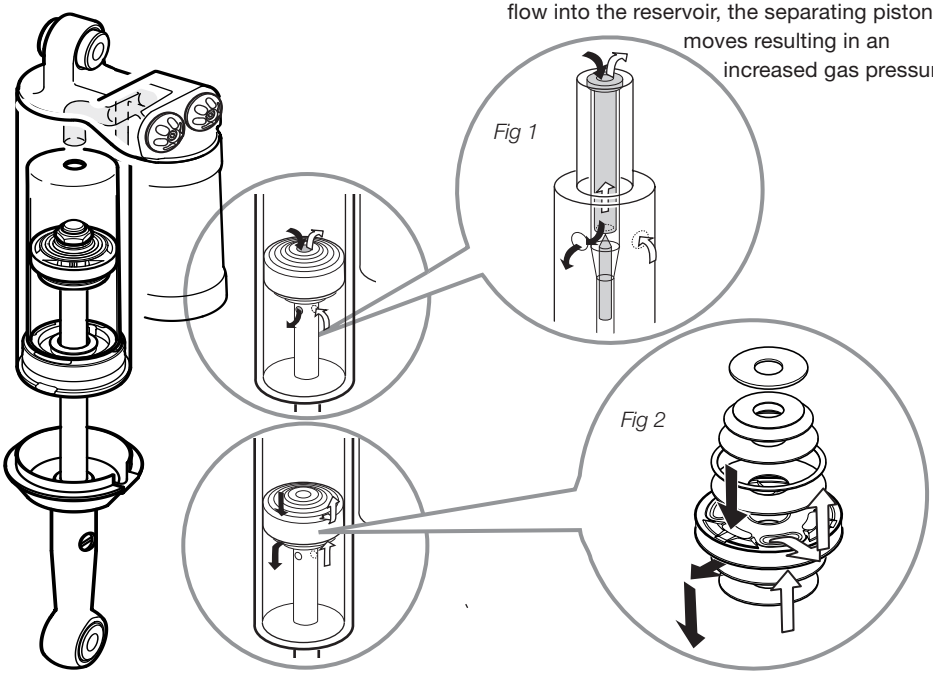

Rebound Damping

When the spring forces the shock absorber to extend again (Fig. 4), the fluid below piston is pressurized and has to move. In a similar pattern *the flow takes two different routes*:

1. Piston rebound shim valve.
2. Rebound adjuster bleed valve.

Now it is the volume above piston that increases and is filled up with flow from piston rebound shim valve and rebound adjuster bleed valve. The gas pressure from the reservoir also pushes fluid into this volume.

The fluid that was displaced into the reservoir during compression movement is now pushed back into the main body by the pressure of the gas.

Fig 3

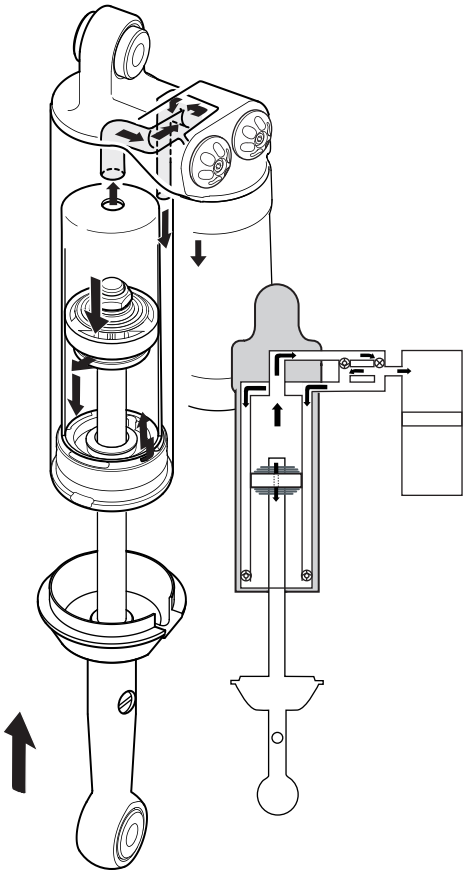

Fig 4

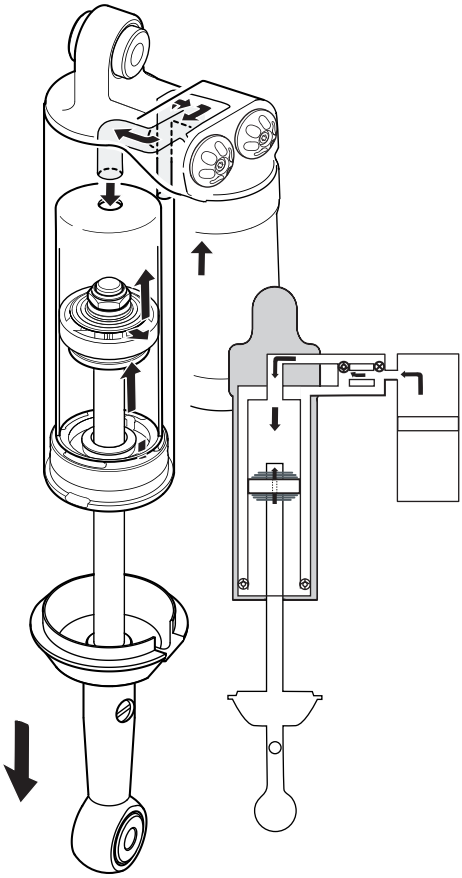

Spring Preload

When adjusting the spring preload you move the spring seat. This will lower or raise the motorcycle ride height.

The spring preload is fundamental for the function of the suspension. If the preload is incorrectly set, any other adjustments will not help to get the intended performance from the suspension.

How to Set the Spring Preload

1. Loosen the platform clamp screw. Use an allen key.
2. Use a C-spanner and move the spring platform to the desired position (2A).
   Or, turn the spring by hand to the desired position (2B).
   The spring platform and the spring are press fitted, therefore, by turning the spring you will move the spring platform.
3. Tighten the platform clamp screw.

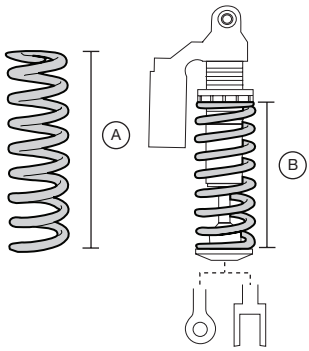

A Free Spring Length
B Installed Spring Length
A-B = Spring Preload
Spring Preload is the difference between the measures A and B.

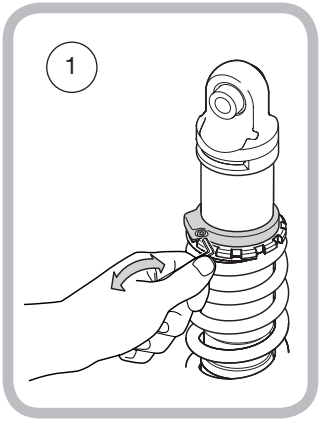

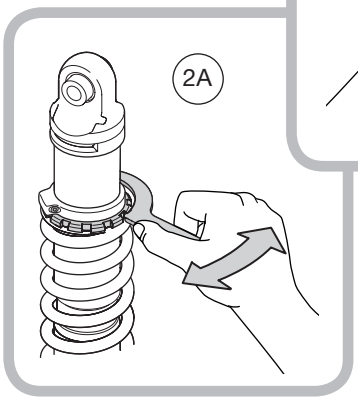

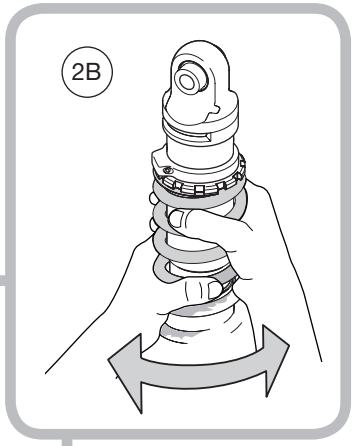

Compression and Rebound

Compression damping controls the energy absorption when the shock absorber is being compressed, thus controls how easy the shock absorber compresses when you hit a bump.

Rebound damping controls the energy absorption when the shock absorber is being extended and controls how fast the shock absorber returns to its normal position after being compressed.

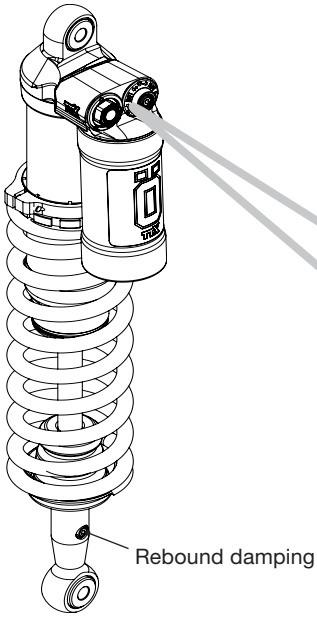

Compression Damping Adjuster

Low speed: Use an 3mm allen key to turn the gold colored adjuster on the top of the reservoir. Turn clockwise to increase damping, turn counter clockwise to decrease.
The adjuster have normal right hand thread.
High speed: Use a 17mm key to adjust the silver colored adjuster on the top of the reservoir. Position I soft, position II medium and position III hard.

Caution!

Do not use force, delicate sealing surfaces can be damaged.

Rebound Damping Adjuster

Use a 3mm allen key to turn the adjuster on the end eye/bracket. Turn clockwise to increase damping, turn counter clockwise to decrease. The adjuster have normal right hand thread.

Note: Since the rebound adjuster is design to compensate for temperature changes, the number of clicks will differ slightly between a cold and a warm shock absorber. The recommended setting is at room temperature.

Caution!

Do not use force, delicate sealing surfaces can be damaged.

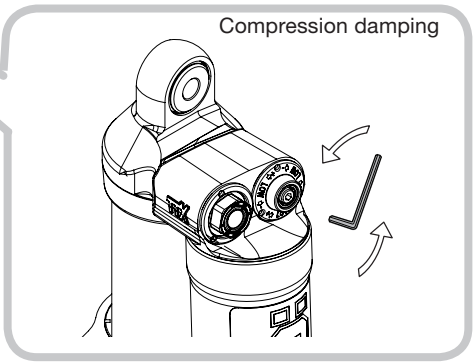

Reset the adjuster

Turn the adjuster clockwise to fully closed position (position zero [0]). Then, turn counter clockwise to open, and count the clicks until you reach the recommended number of clicks. See recommended Set-up data in the Mounting Instructions for the shock absorber.

Caution!

Do not use force, delicate sealing surfaces can be damaged. Handtighten only.

⚠ Warning!

Before riding, always ensure that the basic settings made by Öhlins are intact. Take notes, adjust in small steps and make only one adjustment at a time.

Step 1

Spring Preload - Sag - Ride Height

Spring preload is a crucial part of setting your motorcycle since it affects the height of the motorcycle and the fork angle.

Note!

The following procedure should be performed on a flat surface.

1. Put the motorcycle on a workstand so that both wheels are off the ground and the suspension is unloaded.
2. Mark, for example with a piece of tape, a point immediately above the rear wheel axle.
3. Measure the distance from the marked point to a fixed point, for example the wheel axle. (R1)
4. Measure the distance from the bottom of the upper triple clamp to a fixed point, for example the front wheel axle. (F1)
5. Put the motorcycle on the ground so that the front and the rear suspensions are slightly compressed. Repeat the measuring procedures. (R2 and F2)
6. Sit on the motorcycle in normal riding position, properly outfitted in your riding gear. Repeat the measuring procedures. (R3 and F3)

Recommended Measures

If no other recommendations are given in the Mounting Instructions follow the measures below:

Free sag (R1-R2), (F1-F2)

Rear	30±10 mm
Front	30±15 mm

Ride height (R1-R3), (F1-F3)

Rear	105±10 mm
Front	50±10 mm

Step 2

Adjust spring preload

1. If your measures differ significantly from the recommendations in the Mounting Instructions or from the table above, adjust the spring preload. (See section Spring Preload in this manual).
2. If the ride height still differs from the recomendations, you may need to change spring. Contact your Öhlins dealer for advise.

⚠ Warning!

Incorrect spring rate may produce a fork angle that is too steep or too flat. This in turn will give a tendency for over- or understeering, which could seriously affect the handling characteristics of the motorcycle.

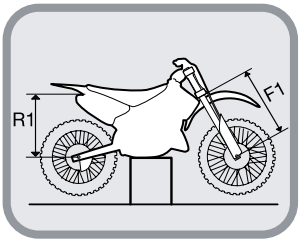

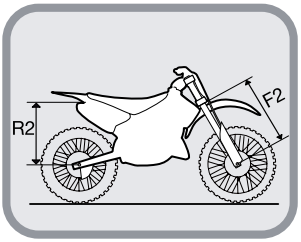

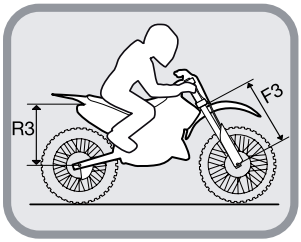

Stability and Traction

All motorcycles are designed with a suspension geometry that includes height and fork angle. *The changing of components can affect this and it is therefore essential that both the front and the rear ends match each other.*

Changing to Öhlins suspension gives optimum performance only when both the front fork and the rear suspension interact properly. It is very important that the front and the rear loaded heights are within the specified values.

Front Fork Springs

To optimize the stability and traction of your motorcycle the front fork must match the rear suspension. Öhlins Racing has a variety of front fork springs available for a large number of motorcycle models.

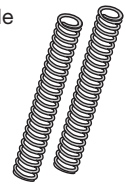

The springs in combination with the Öhlins shock absorbers contribute to superior stability and traction. See the Öhlins Recommendation List by contacting your nearest Öhlins dealer or using our web site.

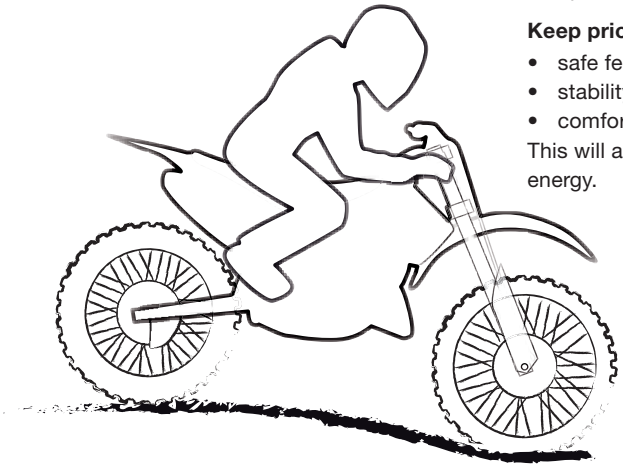

⚠ Warning!

If there are no matching springs for your motorcycle model, use the original springs, however, they must be in good condition and not fatigued.

Note!

Change the fluid in the front fork every 20 hours

Prepare the Settings

By adjusting the shock absorber and testing by trial and error you can learn how the different settings affect your motorcycle.

Always begin your setting by taking a test ride with all adjustments at their recommended basic setting. Choose a short run of varying character, for example with long as well as sharp bends, hard as well as soft bumps. Stay on the same run and adjust only one setting at a time.

Recommended Adjustment Range

Rebound and compression damping: ±5 clicks from original (basic) setting.

When you setup your bike you need to do it together with the front fork and on all types of tracks that you want to optimize, there are no setups that will be 100% perfect on all tracks, compromises need to be made.

Keep priority at:

- safe feeling
- stability
- comfort

This will allow you to ride safer and use less energy.

Start with the rebound adjuster

If the bike feels loose and is transferring a lot of movement during acceleration and braking and/or if the bike feels nervous over bumpy sections close the rebound adjuster two [2] clicks. (If you are close to perfect setup click one click at the time.

If the bike feels hard, harsh (no comfort) and is difficult to enter corners with or does not stay in line over bumpy sections, open the rebound adjuster two clicks.

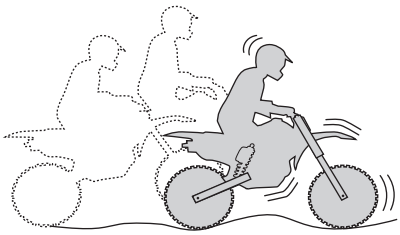

If the vehicle feels

- hard
- bumpy

Decrease rebound damping

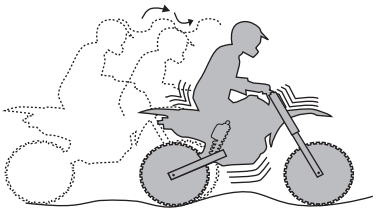

If the vehicle feels

- unstable
- loose
- bouncy

Increase rebound damping

If you have got a good feeling for the bike with spring, preload and the ride height feels OK but the bike runs low and packs down under acceleration bumps, with lost line and/or lost comfort and traction, open the rebound adjuster two [2] clicks.

If the bike is nervous and moving a lot or has a high feeling entering corners, close the rebound adjuster two [2] clicks. Fine tune one [1] click at the time. Test run and make the necessary adjustments. For original rebound setting see the Mounting Instructions for your shock absorber.

Low speed compression damping

The low speed adjuster is used to control the chassi movement towards the ground.

If you feel that the shock absorber feels soft, spongy or the bike feels unstable for example when going in to a corner, close two clicks (clockwise).

If you feel that the bike feels hard and have poor traction, open two clicks (counter-clockwise).

High speed compression damping

The high speed adjuster has three positions, I soft, II medium and III hard.

The position II that the shocks are delivered with is best all-round and it has the function that should suit most riders and tracks.

If you feel that the shock absorber is hard and harsh on small bumps and corners and have poor traction for the rear tire, go over to position I.

If the bike feels soft, has a low riding position and easily goes through the stroke or is bottoms on landing after a jump, go over to position III.

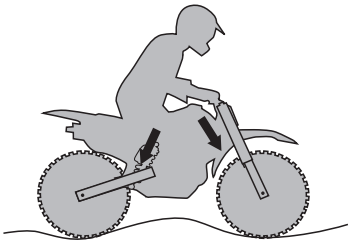

If the vehicle

- feels soft
- feels low
- is bottoming

Increase compression damping

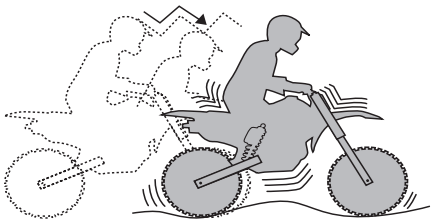

If the vehicle feels

- harsh
- hard

Decrease compression damping

Inspection and Maintenance

Preventive maintenance and regular inspection reduces the risk of functional disturbance. If there is any need for additional service, please contact an authorized Öhlins workshop.

Cleaning

Clean the shock absorber externally with a soft detergent. Use compressed air. Be careful that all dirt is removed. Lift the bump rubber and clean the area below. Keep the shock absorber clean and spray it with oil (WD40, CRC 5-56 or equivalent) after washing.

Caution!

Never spray water directly into the adjuster knobs and/or the ball joints.

Inspection

1. Check ball joints for possible excessive play or stiction.
2. Check the piston shaft for leakage and damage.
3. Check the shock absorber body for external damage.
4. Check the reservoir for external damage that can restrict the floating piston from moving freely.
5. Check for excessive wear of rubber components.
6. Check the attachment points of the shock absorber to the vehicle.

Recommended Service Intervals

MX/Enduro: When used under race conditions every 20 hours of operation.
Off-Road: Every year.

Disposal

Discarded Öhlins products should be handed over to an authorized Öhlins workshop or distributor for proper disposal.

Note!

The Öhlins shock absorber should only be filled with the Öhlins Shock Absorber Fluid, part no 01304-01. Contact your Öhlins dealer for advise.

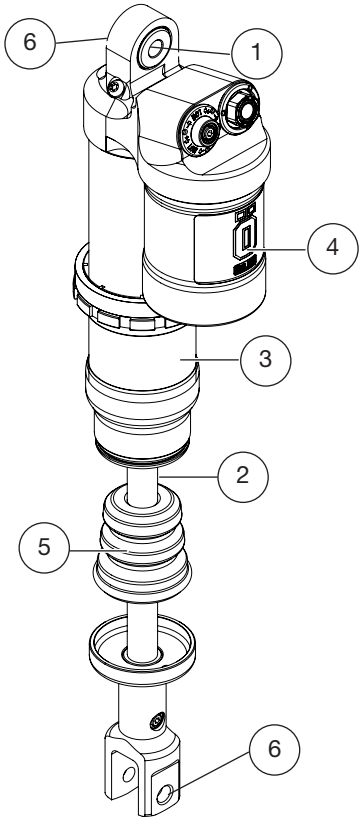

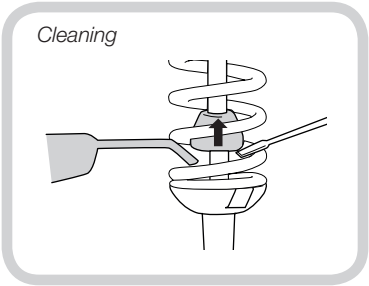

Warning!

Never alter the gas pressure. Special purpose charging equipment and access to nitrogen is required.

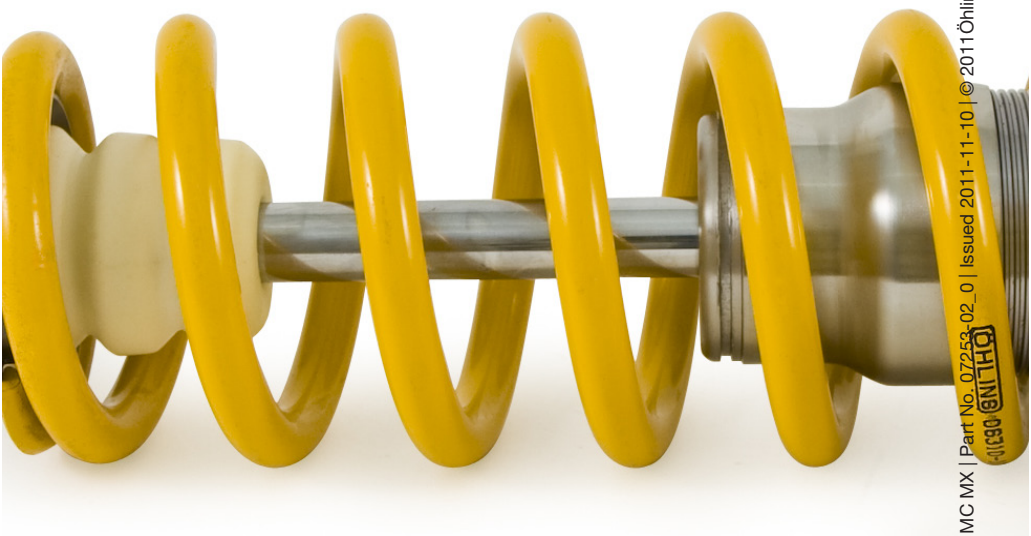

Öhlins Owner's Manual TTX 44 MC MX | Part No. 07253-02_0 | Issued 2011-11-10 | © 2011Öhlins Racing AB

Your Öhlins retailer:

Öhlins Racing AB
Box 722
SE-194 27, Upplands Väsby
Sweden

Phone: +46 (0)8 590 025 00
Fax: +46 (0)8 590 025 80
www.ohlins.com

ADVANCED SUSPENSION TECHNOLOGY

www.ohlins.com